Trickle Vent Detail: Designer Window with 73mm Standard Frame

17/09/2021

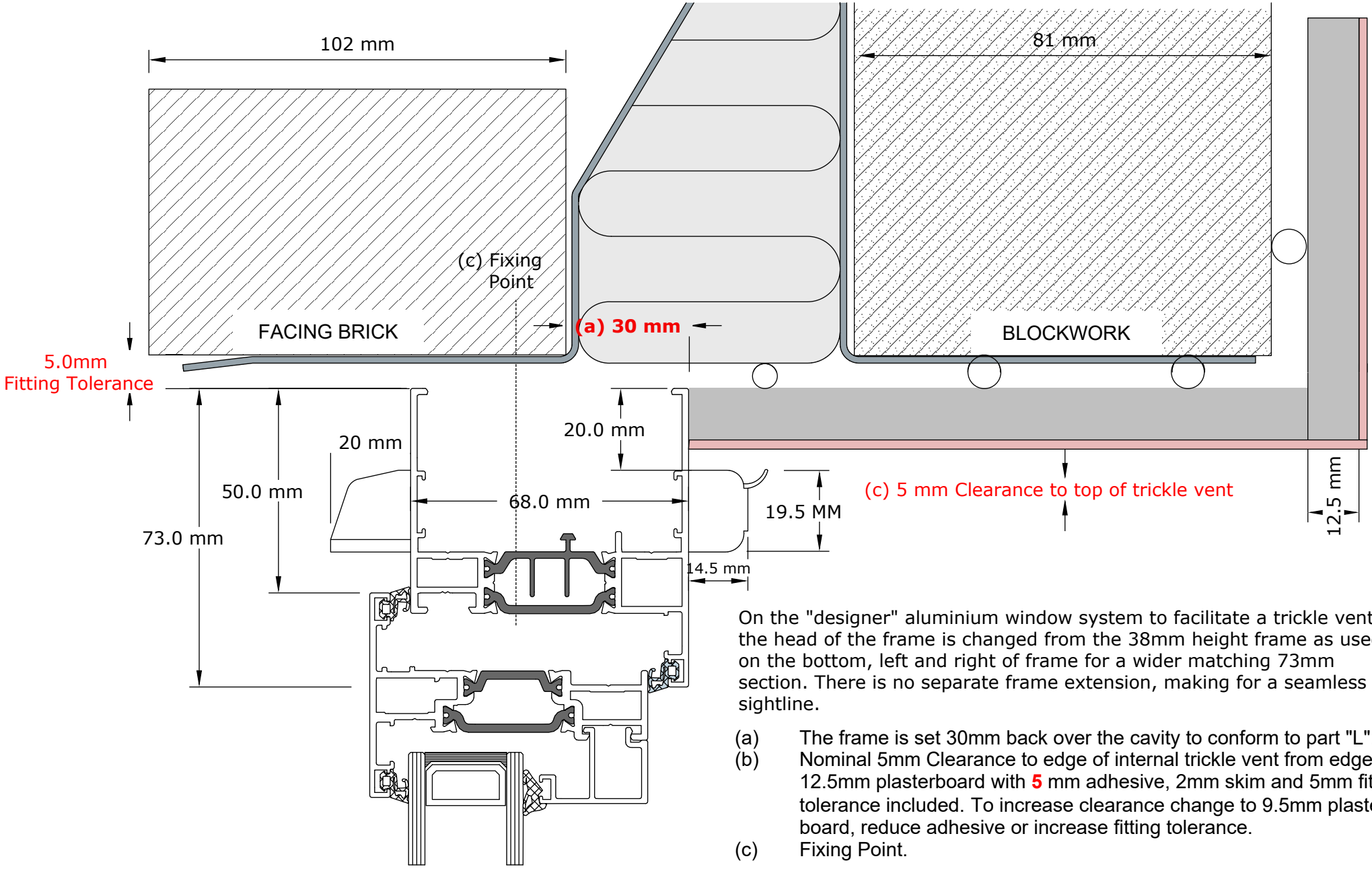

On the "designer" aluminium window system to facilitate a trickle vent the head of the frame is changed from the 38mm height frame as used on the bottom, left and right of frame for a wider matching 73mm section. There is no separate frame extension, making for a seamless sightline.

(a) The frame is set 30mm back over the cavity to conform to part "L".

(b) Nominal 5mm Clearance to edge of internal trickle vent from edge 12.5mm plasterboard with **5** mm adhesive, 2mm skim and 5mm fitting tolerance included. To increase clearance change to 9.5mm plaster board, reduce adhesive or increase fitting tolerance.

(c) Fixing Point.

© Slide and Fold Ltd, 82 Curriers Close, Canley, Coventry. CV4 8AW
Tel:024 76 694 162

Slide and Fold